CC-ATL03-2X0 Atlanta Colorado White high

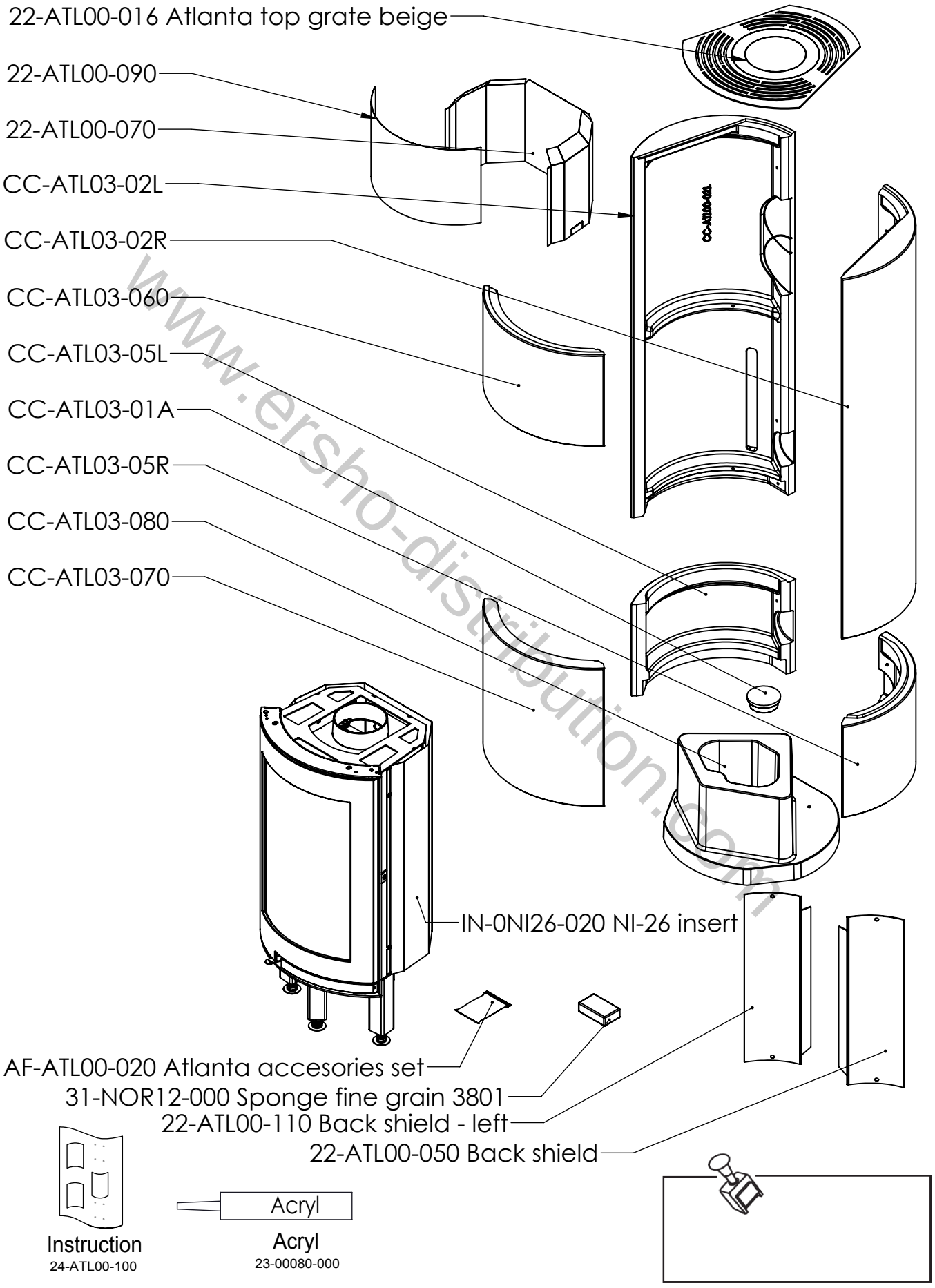

www.ersho-distribution.com